EC TYPE-APPROVAL CERTIFICATE

Communication concerning the

- type-approval ([1])
- ~~extension of type approval~~ ([1])
- ~~refusal of type approval~~ ([1])
- ~~withdraw of type approval~~ ([1])

of a type of a ~~vehicle/component~~/separate technical unit ([1]) with regard to Directive 70/157/EEC, as last amended by Directive 2013/15/EU

Type-approval number: ***e24*70/157*2007/34*2484*00***

Reason for extension: ***N/A***

SECTION I

0.1	Make (trade name of manufacturer):	***MILLTEK***
0.2	Type and general commercial description:	***MSFD207-212***
	Variant(s):	***(MSFD212 - Front silencer MSFD207 - Left rear silencer MSFD208 - Right rear silencer)***
0.3	Means of identification of type if marked on the separate technical unit ([1]) ([2]):	***Type shield at the silencers below***
0.3.1	Location of that marking:	***Silencer below***
0.4	Category of vehicle ([3]):	***M1***
0.5	Name and address of manufacturer:	***MILLTEK SPORT LTD Belfield Industrial Estate Ilkeson, Derbyshire. DE7 8DU.***
0.7	In the case of components and separate technical units, location and method of affixing of the EC approval mark:	***Type shield at the silencers below***
0.8	Address(es) of assembly plant(s):	***MILLTEK SPORT LTD Belfield Industrial Estate Ilkeson, Derbyshire. DE7 8DU.***

locity Automotive GmbH I

NSAI, 1 Swift Square, Northwood, Santry, Dublin 9, Ireland. Telephone: (+353+1) 807 3800, Facsimile: 01-807 3844

Type-approval number: ***e24*70/157*2007/34*2484*00***

SECTION II

1.	Additional information (where applicable):	*See Addendum*
2.	Technical Service responsible for carrying out the tests:	*TÜV SÜD Auto Service GmbH, Westendstraße 199, D-80686 München, Germany*
3.	Date of test report:	*20.07.2016*
4.	Number of test report:	*16-00086-VA-GBM-00*
5.	Remarks (if any):	*See Addendum*
6.	Place:	*Dublin*
7.	Date:	*2nd August, 2016.*
8.	Signature:	

9. The index to the information package lodged with the approval authority, which may be obtained on request, is attached.

10. List of documents:

1. Enclosure 1
2. Enclosure 2
3. Enclosure 3
4. Technical report with annexes and drawings

Isuzu Automotive GmbH

NSAI, 1 Swift Square, Northwood, Santry, Dublin 9, Ireland. Telephone: (+353+1) 807 3800, Facsimile: 01-807 3844

concerning the separate technical unit type-approval of exhaust systems for motor vehicles with regard to Directive 70/157/EEC, as last amended by Directive 2013/15/EU

1.	Additional information	
1.1	Composition of the separate technical unit:	*(*)*
1.2	Trade mark or trade name of the type(s) of motor vehicle to which the silencer is to be fitted ([1])	*(*)*
1.3	Type(s) of vehicle and its/their type-approval number(s):	*(*)*
1.4	Engine	
1.4.1	Type (positive ignition, diesel):	*(*)*
1.4.2	Cycles: two-stroke, four-stroke:	*(*)*
1.4.3	Total cylinder capacity:	*(*)*
1.4.4	Rated maximum engine power:	*(*) kW*
	- at:	*(*) rev/min*
1.5	Number of gear ratios:	*(*)*
1.6.	Gear ratios employed:	*(*)*
1.7	Drive-axle ratio(s):	*(*)*
1.8	Sound level values	
	- moving vehicle:	*(*) dB(A)*
	speed stabilised before acceleration at:	*(*) km/h*
	- stationary vehicle:	*(*) dB(A)*
	at:	*(*) rev/min*
1.9	Value in back pressure:	*(*)*
1.10	Any restriction in respect of use and mounting requirements:	*(*)*
5.	Remarks:	*(*) = see Test Report*

Iocity Automotive GmbH

NSAI, 1 Swift Square, Northwood, Santry, Dublin 9, Ireland. Telephone: (+353+1) 807 3800, Facsimile: 01-807 3844

concerning the type-approval of a vehicle with regard to Directive 70/157/EEC, as last amended by Directive 2013/15/EU

1.	Additional information	
1.1	If necessary, list of vehicles covered by item 3.1.2.3.2.3. of Annex III of UN/ECE Regulation No 51:	*N/A*
1.2	Engine	
1.2.1	Manufacturer:	*N/A*
1.2.2	Type:	*N/A*
1.2.3	Model:	*N/A*
1.2.4	Rated maximum power : .....kW at min-1:	*N/A*
1.3	Transmission (non-automatic gearbox/automatic gearbox):	*N/A*
1.3.1	Number of gears:	*N/A*
1.4	Equipment	
1.4.1	Exhaust silencer	
1.4.1.1	Manufacturer:	*N/A*
1.4.1.2	Model:	*N/A*
1.4.1.3	Type..... in accordance with drawing No.:	*N/A*
1.4.2	Intake silencer:	
1.4.2.1	Manufacturer:	*N/A*
1.4.2.2	Model:	*N/A*
1.4.2.3	Type..... in accordance with drawing No.:	*N/A*
1.5	Tyre size:	*N/A*
1.5.1	Description of tyre type used for type-approval testing:	*N/A*
1.6	Measurements	
1.6.1	Sound level of moving vehicle:	*N/A*

Measurement Results			
	Left-hand side dB(A) ([1])	Right-hand side dB(A) ([1])	Position of gear lever
First measurement			
Second measurement			
Third measurement			
Fourth measurement			
Test result: …… dB (A)/E ([2])			

([1]) The measurement values are given with the 1 dB (A) deduction in accordance with provisions of item 2.2.1 of Annex I.
([2]) 'E' indicates that the measurements in question were conducted in accordance with this Directive.

Unity Automotive GmbH

NSAI, 1 Swift Square, Northwood, Santry, Dublin 9, Ireland. Telephone: (+353+1) 807 3800, Facsimile: 01-807 3844

1.6.2 Sound level of stationary vehicle: ***N/A***

Measurement Results		
	dB (A)	Engine
First measurement		
Second measurement		
Third measurement		
Test result: …… dB (A)/E ([1])		
([1]) 'E' indicates that the measurements in question were conducted in accordance with this Directive.		

1.6.3 Sound level of compressed air noise: ***N/A***

Measurement Results		
	Left-hand side dB(A) ([1])	Right-hand side dB(A) ([1])
First measurement		
Second measurement		
Third measurement		
Fourth measurement		
Test result: …… dB (A)		
([1]) The measurement values are given with the 1 dB (A) deduction in accordance with provisions of item 2.2.1 of Annex I.		

5. Remarks: ***N/A***

Iocity Automotive GmbH

NSAI, 1 Swift Square, Northwood, Santry, Dublin 9, Ireland. Telephone: (+353+1) 807 3800, Facsimile: 01-807 3844

Type-approval number: ***e24*70/157*2007/34*2484*00***

Index to the Information Package

Date of issue:	*2nd August, 2016.*
Date of latest amendment:	*N/A*
Reason for extension/revision:	*N/A*

1. Additional conditions, and advisory notes on legal alternatives

2. Test report(s)

- numbers(s):	*16-00086-VA-GBM-00*
- date of issue:	*20.07.2016*
- date of latest amendment:	*N/A*

3. Information document

- number(s):	*MSFD207-212*
- date of issue:	*13.07.2016*
- date of latest amendment:	*N/A*

Documentation: *17 pages*

locity Automotive GmbH

NSAI, 1 Swift Square, Northwood, Santry, Dublin 9, Ireland. Telephone: (+353+1) 807 3800, Facsimile: 01-807 3844

Type-approval No: ***e24*70/157*2007/34*2484*00***

Appendix: **Additional conditions, and advisory notes on legal alternatives.**

A: Additional conditions:

1. The STU, Type MSFD207-212 contains the following type approval mark:
   e24 032484
   The dimensions and proportions of this mark must correspond to the Directive.
   All parts of the separate technical unit, other than the mounts and the exhaust pipe shall be legibly and durably labelled with the following information:
   - EC Type Approval mark
   - Manufacturer's trade description
   - Trademark or trade name of the manufacturer

   As an alternative to using a plate for the above information, the information may be embossed on the silencer housing.
2. Mounting instructions shall be supplied with each unit, giving details of any limitations in the use of the silencer.
3. The silencer should be mounted in accordance with the mounting instructions.
4. The attached technical report, with any of its attachments, forms part of this Type Approval certificate.
5. Each individual product from series production shall be to the measurements specified in the attached drawings, and shall be manufactured only from the materials specified in the Approval documents.
6. Changes in the product are permitted only with the explicit permission of NSAI. Breaches of this requirement will lead to a withdrawal of the Type Approval, and in addition may be subject to criminal prosecution.
7. This Type Approval will expire when it is surrendered by the holder, or withdrawn by NSAI, or when the approved type of product no longer conforms to legal requirements. The recall of the Type Approval can be issued by NSAI when the conditions required for the issuing or continuation of the Type Approval are no longer current, or when the Approval holder is in breach of the duties attached to the Type Approval, or when it is established that the approved type no longer meets the requirements of traffic safety.
8. NSAI may at any time check the correct performance of the duties imposed by the grant of this Type Approval, and in order to do so, may make tests, or have tests made.
9. Changes in the company name, address or manufacturing site, as well as in any of the sales or other agents specified in the issuing of the approval must immediately be notified to the NSAI.
10. The duties imposed by the issuing of this certificate are not transferable. The legal protection of third parties is not affected by this certificate.
11. When the manufacture or sale of the vehicle, system, component or separate technical unit has not been started within one year of the date of issue of this certificate, then NSAI is to be informed. This requirement also applies when the manufacture or sale has been halted for more than one year, or when it ought to have been halted for more than one year.The initial commencement of manufacture or sale, or the resumption of manufacture or sale, shall then be notified to NSAI within one month of commencement or resumption.

B : Legal Options

Any objection to the requirements set out in this certificate shall be made within one month of the date of issue. The objection shall be made, in writing, to NSAI in Dublin.

Bosch Automotive GmbH

NSAI, 1 Swift Square, Northwood, Santry, Dublin 9, Ireland. Telephone: (+353+1) 807 3800, Facsimile: 01-807 3844

TÜV SÜD Auto Service GmbH
Westendstraße 199
D-80686 München

Auto Service

Prüfbericht Nr. / *Test report no.* 16-00086-VA-GBM-00
Hersteller / *Manufacturer:* MILLTEK SPORT LTD, GB-Derbyshire DE7 8DU
Typ / *Type:* MSFD207-212

P R Ü F B E R I C H T
T E S T R E P O R T

Nr. / *no.* 16-00086-VA-GBM-00

über die Prüfung eines Ersatzauspuffsystems oder
eines Bauteils davon als selbständige technische Einheit gemäß

der Richtlinie des Rates der Europäischen Gemeinschaften zur Angleichung der Rechtsvorschriften der Mitgliedstaaten über den zulässigen Geräuschpegel und die Auspuffvorrichtung von Kraftfahrzeugen /

about a test of an exhaust system or a component of
a type of separate technical unit for motor vehicles
in according to directive of the Council of the European Community for approximation of the laws of the Member States relating to
the sound level and replacement silencers for motor vehicles

Nr. 70/157/EWG vom 06.02.1970
einschließlich aller Änderungen bis
Nr. 2007/34/EG vom 14.06.2007 /

No. 70/157/EEC dated 06.02.1970
including all amendments up to and including
No. 2007/34/EC dated 14.06.2007

Genehmigungsstand / *Approval status*		
☑	Erteilung einer Typgenehmigung / *Granting of a type approval:*	e24*70/157*2007/34*2484*00
☐	Erweiterung / Änderung zur Typgenehmigung Nr. / *Extension / correction to type approval no.:*	--

locity Automotive GmbH

Gründe der Erweiterung / *Reasons for extension*

Es wird geändert /
It will be changed: --

Es wird aktualisiert /
It will be updated: --

0. Allgemeine Angaben / *General information*

0.1.	Fabrikmarke / *Make:*	MILLTEK
0.2.	Typ / *Type:*	MSFD207-212
0.2.1.	Varianten (Anzahl) / *Variants (numbers):*	MSFD212, MSFD207, MSFD208 (1)
0.4.	Name und Anschrift des Herstellers / *Name and address of manufacturer:*	MILLTEK SPORT LTD Belfield Industrial Estate, Ilkeston GB-Derbyshire DE7 8DU
0.5.	Nr. der Beschreibungsmappe/ *No. of information document:*	MSFD207-212
	Ausgabedatum / *Date:*	13.07.16
1.	Beschreibung der Fahrzeuge, für die die Einrichtung bestimmt ist / *Description of the vehicles the unit is used for:*	siehe Anlage 2 / *notice enclosure 2*

Identity Automotive GmbH

2. Angaben zum Prüfobjekt / *Composition of the separate technical unit*

2.1. Art des Ersatzschalldämpfers / *Kind of replacement silencer:*
Technische Einheit, bestehend aus einem Vorschalldämpfer nach Zeichnung Nr. A1771, oval 105 x 258 x 500 mm, Absorptionsprinzip und zwei Nachschalldämpfer nach Zeichnung Nr. A1766, oval 152 x 290 x 250 mm, Absorptions-Reflexionsprinzip mit Endrohren nach Zeichnung Nr. AT1176 /
Technical unit, consisting of a front silencer according to drawing no. A1771, oval 105 x 258 x 500 mm, absorption-principle and two rear silencers according to drawing no. A1766, oval 152 x 290 x 250 mm, absorption-reflection-principle, with tail pipes according to drawing no. AT1176.

2.2. Zusammensetzung der technischen Einheit / *Composition of the separate technical unit:* siehe Anlage 1 / *notice enclosure 1*

2.3. Lage und Richtung der Endrohre / *Position and direction of the tail pipes:* am Fahrzeugende links und rechts nach hinten / *at the rear of the vehicle at the left and right side*

3. Prüfprotokoll / *Test report*

Die Prüfungen wurden in 1 Versuchsreihe A mit folgendem Fahrzeug durchgeführt. / *The tests were carried out in 1 series A with the following vehicle:*

Versuchsreihe A / *series A:* (lfd. Nr. / *no.* 1, Meßdatum / *Date* 18.07.16)

3.1. Fahrzeug / *Vehicle*

3.1.1.	Hersteller / *Manufacturer:*	FORD (USA)
3.1.2.	Typ / *Type:*	LAE
3.1.2.1	Ausführung / *Model:*	N38H2BX
3.1.3.	Genehmigungs-Nr. / *Homologation no.:*	e13*2007/46*1551*
3.1.3.1	Nachtrag bzw. Erweiterung / *Extension:*	01
3.1.4.	Fahrzeugidentifizierungsnummer / *Vehicle identification no.:*	1FATP8UH5F5432513
3.1.5.	Baujahr / *Year of manufacture:*	2016
3.1.6.	km-Stand / *Kilometres:*	4323

Ecity Automotive GmbH

TÜV SÜD Auto Service GmbH
Westendstraße 199
D-80686 München

3. **Prüfprotokoll** (Fortsetzung) / ***Test report*** *(continuation)*

3.2. Antriebsmaschine / *Engine*

3.2.1.	Hersteller / *Manufacturer:*	FORD
3.2.2.	Typ / *Type:*	H
3.2.3.	Kennzeichnung / *Identification:*	H
3.2.4.	Nennleistung / *Rated maximum engine power:*	233 kW bei / *at* 5700 min^{-1}
3.2.5.	Hubraum (abgerundet) / *Engine capacity:*	2261 cm^3

3.3. Kraftübertragung / *Transmission*

3.3.1.	Art der Kraftübertragung / *Kind of transmission:*	6-Gang-Automatikgetriebe / *6 speed-automatic-transmission*
3.3.2.	Reifengröße / *Tyre size:*	255/40 ZR19 96Y

Das Kraftfahrzeug war ausgerüstet mit einem fabrikneuen Ersatzschalldämpfer / *The vehicle was equipped with a new replacement silencer*

Typ / *Type:*	MSFD207-212
Zusammenbau lt. Anlage 1 / *Assembly (positions see enclosure 1):*	1)2a)3a)4a)4b)5a)

3.4. Messung der Geräuschwerte / *Acoustic measurements*

3.4.1.	Typ des Meßgerätes / *Type of the sound level meter:*	2236
3.4.2.	Hersteller des Meßgerätes / *Manufacturer of the sound level meter:*	Brüel & Kjaer

Iocrv Automotive GmbH I

3. Prüfprotokoll (Fortsetzung) / ***Test report*** *(continuation)*

3.4.3.	Fahrgeräusch / *Sound level moving vehicle:*	nach der Richtlinie des Rates der EG Nr. 70/157/EWG vom 06.02.1970 in der Fassung 2007/34/EG vom 14.06.2007 / *according to the Council Directive No. 70/157/EEC dated 06.02.1970 at it´s session 2007/34/EC dated 14.06.2007*
3.4.4.	Standgeräusch / *Sound level stationary vehicle:*	nach der Richtlinie des Rates der EG Nr. 70/157/EWG vom 06.02.1970 in der Fassung 2007/34/EG vom 14.06.2007 / *according to the Council Directive No. 70/157/EEC dated 06.02.1970 at it´s session 2007/34/EC dated 14.06.2007*
3.4.5.	Auspuffmündungsgeräusch / *Tail pipe sound level:*	entfällt / *not applicable*

3.5. Messung des Abgasgegendrucks / *Measuring of exhaust back pressure*

3.5.1.	Typ des Meßgerätes / *Type of the instrument:*	CPH6200-S2
3.5.2.	Hersteller des Meßgerätes / *Manufacturer of the instrument:*	WIKA
3.5.3.	Meßmethode / *Testing methods:*	in Stufe 2 / *in 2nd position*

3.6. Konditionierung der Auspuffschalldämpferanlage / *Conditioning* durch Druckschwingungen / *by pulsation*

Mobility Automotive GmbH

3. Prüfprotokoll (Fortsetzung) / ***Test report*** *(continuation)*

3.7. Ergebnisse / *Test results*

3.7.1. Das Ergebnis der Prüfungen ist der als Anlage 3 beigefügten Tabelle zu entnehmen. / *The test results are attached in the enclosure 3.*

3.7.2 Die beschriebene technische Einheit (Ersatzschalldämpfer) darf an den in der Anlage 2 aufgeführten Kraftfahrzeugen unter den dort genannten Bedingungen verwendet werden. / *The described technical unit (replacement silencer) is suitable for an application at the vehicles named in enclosure 2.*

4. Anlagen / *Enclosures*

Anlage 1 Teile der technischen Einheit (1 Seite / *Page*)
Enclosure 1 Composition of the separate technical unit

Anlage 2 Verwendungsbereich (1 Seite / *Page*)
Enclosure 2 Field of application

Anlage 3 Ergebnis der Prüfungen (1 Seite / *Page*)
Enclosure 3 Test results

5. Schlußbescheinigung / *Summary*

Die unter Ziffer 0.5 erwähnte Beschreibungsmappe und der darin beschriebene Typ entsprechen der genannten Prüfgrundlage.
Der ungünstigste Fall wurde entsprechend Prozessbeschreibung „Erstellung von Gutachten“ bestimmt.
Der Prüfbericht darf nur vom Auftraggeber und nur in vollem Wortlaut vervielfältigt und weitergegeben werden. Eine auszugsweise Vervielfältigung und Veröffentlichung des Prüfberichtes ist nur nach schriftlicher Genehmigung des Prüflaboratoriums zulässig. /

The information folder stated at item 0.5 and the type described therein are in compliance with the test specification mentioned above.
The worst-case was selected in accordance with document “Preparation of Test Reports”.
The test report may be reproduced and published in full and by the client only. It can be reproduced partially with the written permission of the test laboratory only.

Ident Automotive GmbH

5. Schlußbescheinigung (Fortsetung) / *Summary (continuation)*

Benannt als Technischer Dienst durch /
designated as Technical Service by:

Genehmigungsbehörde / *Approval authority*	**Land / *Country***	**Registriernummer / *Registration-number***	**Aktueller Benennungsumfang / *Actual scope list***
Kraftfahrt-Bundesamt (KBA)	Deutschland/ *Germany*	KBA-P 00100-10	www.kba.de
Vehicle Certification Agency (VCA)	Vereintes Königreich/ *United Kingdom*	VCA-TS-006	http://ec.europa.eu/enterprise/sectors/automotive/approval-authorities-technical-services/technical-services/index_en.htm
Approval Authority of the Netherlands (RDW)	Niederlande/ *The Netherlands*	RDWT-082-01	
National Standards Authority of Ireland (NSAI)	Irland/ *Ireland*	Technical Service Number: 49	
Vehicle Safety Certification Center (VSCC)	Taiwan/ *Taiwan*	DE04-06-2	http://www.vscc.org.tw/English/Default.aspx

Dieser Bericht umfasst Seite 1 bis 7. /
This test report contains the pages 1 up to 7.

München, 20.07.16

Technischer Dienst Technical Service TÜV SÜD Auto Service GmbH 044

Dipl.-Ing. M. Ebert
Sachverständiger / *Recognized Expert*
ebt
MSFD207-212_0.doc

locity Automotive GmbH

TÜV SÜD Auto Service GmbH
Westendstraße 199
D-80686 München

Auto Service

A N L A G E 1 **zum Prüfbericht Nr. / *to test report no.* 16-00086-VA-GBM-00**
E N C L O S U R E 1 **Typ / *Type:* MSFD207-212**
Hersteller / *Manufacturer:* MILLTEK SPORT LTD
GB-Derbyshire DE7 8DU

Teile der technischen Einheit + Originalteile/Ersatzteile = Gesamtauspuffanlage /
Composition of the separate technical unit

Lfd. Nr. nach Zeichnung / *No. see in drawing*	Einzelteile, Abmessungen in mm / *Components parts, dimensions in mm*	Abmessungen des Teiles in mm bzw. Originalteil / Ersatzteil / *Dimensions of the part in mm or original part / replacement part*	Teilenummer bzw. Genehmigungsnummer / *Part no. or homologation no.*
1)	Krümmer mit Katalysator / *Manifold with catalyst*	Originalteile / *Original parts*	-
2a)	Vorschalldämpfer / *Front silencer* (Eintrittsrohr / *Inlet pipe* ∅ 70 2 Austrittsrohre / *Outlet pipes* ∅ 70)	oval 105 x 258 x 500 lg	MSFD212
3a)	Zwischenrohre / *Intermediate pipes*	Ersatzteile / *Replacement parts*	MSFD205 / MSFD206
4a)	Nachschalldämpfer links / *Left rear silencer* (Eintrittsrohr / *Inlet pipe* ∅ 70 Austrittsrohr / *Outlet pipe* ∅ 70)	oval 152 x 290 x 250 lg	MSFD207
4b)	Nachschalldämpfer rechts / *Right rear silencer* (Eintrittsrohr / *Inlet pipe* ∅ 70 Austrittsrohr / *Outlet pipe* ∅ 70)	oval 152 x 290 x 250 lg	MSFD208
5a)	2 Endrohre / *Tail pipes* (gem. Zeichnung / *acc. drawing* AT1176)	Ersatzteile / *Replacement parts*	MSTIP213/214

locity Automotive GmbH

e24*70/157*2007/34*2484*00

TÜV SÜD Auto Service GmbH
Westendstraße 199
D-80686 München

Auto Service

A N L A G E 2
E N C L O S U R E 2

zum Prüfbericht Nr. / *to test report no.* 16-00086-VA-GBM-00
Typ / *Type:* MSFD207-212
Hersteller / *Manufacturer:* MILLTEK SPORT LTD
GB-Derbyshire DE7 8DU

Verwendungsbereich (Fahrzeugdaten) / *Field of application*

Lfd. Nr. Fahrzeug /	Hersteller /	Fabrikmarke /	Handelsbezeichnung /	Fahrzeugtyp (und Genehmigungsnummer) /	Fahrzeugklasse /	Motortyp (Verbrennungsverfahren) /		Art des Motors /	Hubraum in cm^3 /	Nennleistung in kW/min^{-1} /	Anordnung entspr. Anlage 1 lfd. Nr. /
No. of vehicle	*Manufacturer*	*Trade mark*	*Commercial description*	*Vehicle type (and no. of homologation)*	*Category of vehicle*	*Engine type (type of combustion)*		*Stroke*	*Engine capacity in cm^3*	*Rated maximum engine power in kW/min^{-1}*	*Composition as shown in enclosure 1 no.*
		laufende Nummer der Anlage zum EG-Typgenehmigungsbogen / *No. addendum to EC Type-approval certificate*									
		1.2.		1.3.		1.4.1.		1.4.2.	1.4.3.	1.4.4.	
1)	FORD (USA)	Ford	Mustang	LAE (e13*...*1551*)	M1	H	Otto / *spark ignition*	4-Takt / *4-stroke*	2261	233/5700	1)2a)3a)4a)4b)5a)
2)										233/5600	

MSFD207-212_2.doc

locity Automotive GmbH /

e24*70/157*2007/34*2484*00

TÜV SÜD Auto Service GmbH
Westendstraße 199
D-80686 München

Auto Service

A N L A G E 3 zum Prüfbericht Nr. / *to test report no.* **16-00086-VA-GBM-00**
E N C L O S U R E 3 **Typ / *Type:*** **MSFD207-212**
Hersteller / *Manufacturer:* **MILLTEK SPORT LTD**
GB-Derbyshire DE7 8DU

locity Automotive GmbH

Ergebnis der Prüfungen / *Test results*

Lfd. Nr. Fahrzeug / *No. of vehicle*	Anzahl der Gänge / Automatik / *Number of gear ratios / automatic transmission*	Benutzte Gänge / *Gear ratios employed*	Übersetzung Achsgetriebe / *Drive-axle ratios*	EG-Typgenehmigungsnr. bez. Geräusch / *EC-homo-log. no. concerning to the sound level*	Geräuschwerte in dB(A) / *Sound level values in dB(A)*									Abweichung Abgasgegendruck in % / *Variation in back-press. in %*
					fahrendes Fahrzeug / *driving vehicle*					stehendes Fahrzeug / *stationary vehicle*				
					Ersatz gemessen / *Repl.-ment measured*	Serie gemessen / *Original measured*	Fahrzg.-Genehmigung / *Vehicle type homologation*	km/h	Grenzwert *) / *limit value *)*	Ersatz gemessen / *Repl.-ment measured*	Serie gemessen / *Original measured*	Fahrzg.-Genehmigung / *Vehicle type homologation*	min^{-1}	
	laufende Nummer der Anlage zum EG-Typgenehmigungsbogen / *No. addendum to EC Type-approval certificate*													
	1.5.	1.6.	1.7.	1.8.										1.9.
1)	- / 6	D	3,550	E11 51R-02 7956*01	75	75	73	50	74	91	91	77	3750	-12

*) Grenzwert der Richtlinienfassung, die bei Erteilung der Fahrzeuggenehmigung Gültigkeit hatte / *Limit value of directive which was valid by vehicle type homologation,*

e24*70/157*2007/34*2484*00

Beschreibungsbogen Nr. MSFD207-212 betreffend die EG-Typgenehmigung als selbständige technische Einheit einer Auspuffvorrichtung für Kraftfahrzeuge (Richtlinie 70/157/EWG, zuletzt geändert durch die Richtlinie 2007/34/EG) / *Information Document No. MSFD207-212 according to EC type approval as separate technical unit of exhaust systems for motor vehicles (Directive 70/157/EEC, as last amended by Directive 2007/34/EC)*

0. Allgemeines / *General informations*

0.1.	Fabrikmarke / *Make:*	MILLTEK
0.2.	Typ und allgemeine Handelsbezeichnung(en) / *Type and commercial designations*:	MSFD207-212 (MSFD212 - Front silencer MSFD207 - Left rear silencer MSFD208 - Right rear silencer)
0.5.	Name und Anschrift des Herstellers / *Name and address of manufacturer*:	MILLTEK SPORT LTD Belfield Industrial Estate Ilkeston, Derbyshire. DE7 8DU
0.7.	Art und Ort der Kennzeichnung / *Kind and place of marking:*	Typschild auf der Unterseite der Schalldämpfer / *Type shield at the silencers below*
0.8.	Anschrift(en) der Fertigungsstätten / *Address of making plant:*	siehe 0.5 / *see 0.5*

1. Beschreibung des Fahrzeugs, für das die Einrichtung bestimmt ist / *Description of the vehicles the unit is used for:*

1.1.	Fabrikmarke / *Make*:	siehe Anlage 2 des Technischen Berichts / *see enclosure 2 of the test report*
1.2.	Typ und allgemeine Handelsbezeichnungen / *Type and commercial designations*:	siehe Anlage 2 des Technischen Berichts / *see enclosure 2 of the test report*
1.3.	Merkmale zur Typidentifizierung, sofern vorhanden / *Means of identifikation of type if marked*:	siehe Anlage 2 des Technischen Berichts / *see enclosure 2 of the test report*
1.4.	Fahrzeugklasse / *Category of vehicle*	siehe Anlage 2 des Technischen Berichts / *see enclosure 2 of the test report*
1.5.	EG-Typgenehmigungsnummer in bezug auf den Geräuschpegel / *EC-homologation no. concering the sound level*:	siehe Anlage 3 des Technischen Berichts / *see enclosure 3 of the test report*

loudy Automotive GmbH

2. Beschreibung dieser Einrichtung / *Description of technical unit:*

2.1. Beschreibung der Ersatzauspuffanlage mit Angabe der Anordnung / *Description of replacement exhaust system incl. composition:* : siehe Anlage 2 des Technischen Berichts / *see enclosure 2 of the test report*

2.2. Detaillierte Zeichnungen jedes Bauteils, aus denen Anordnung und Merkmale hervorgehen. In diesen Zeichnungen ist die für die vorgeschriebene Anbringung des EG-Typgenehmigungszeichens vorgesehene Stelle anzugeben / *Detailed drawings of every part to see composition and means. In these drawings the place of the type-approval-sign is to mark.*

Anlagen / *Enclosures*	Zeichnungsnr. / *no. of drawing*:	Datum / *Date:*
Zeichnung Gesamtanlage / *Drawing exhaust system:*	T0084	20.07.16
Zeichnungen der Bauteile der zu genehmigenden techn. Einheit / *Drawing of parts of the separate technical unit:*	A1771 A1766 AT1176	22.03.16 20.01.16 21.12.15
Einbauanleitung / *Mounting instructions*	1 Seite / *Page*	-

13.07.16

Datum, Unterschrift / *Date, signature*

locity Automotive GmbH

DRAWING No.
T0084

REV	DATE	REVISION DETAILS	SIGN
A	20/07/2016	SYSTEM DRAWING PRODUCED ON CAD	DJM

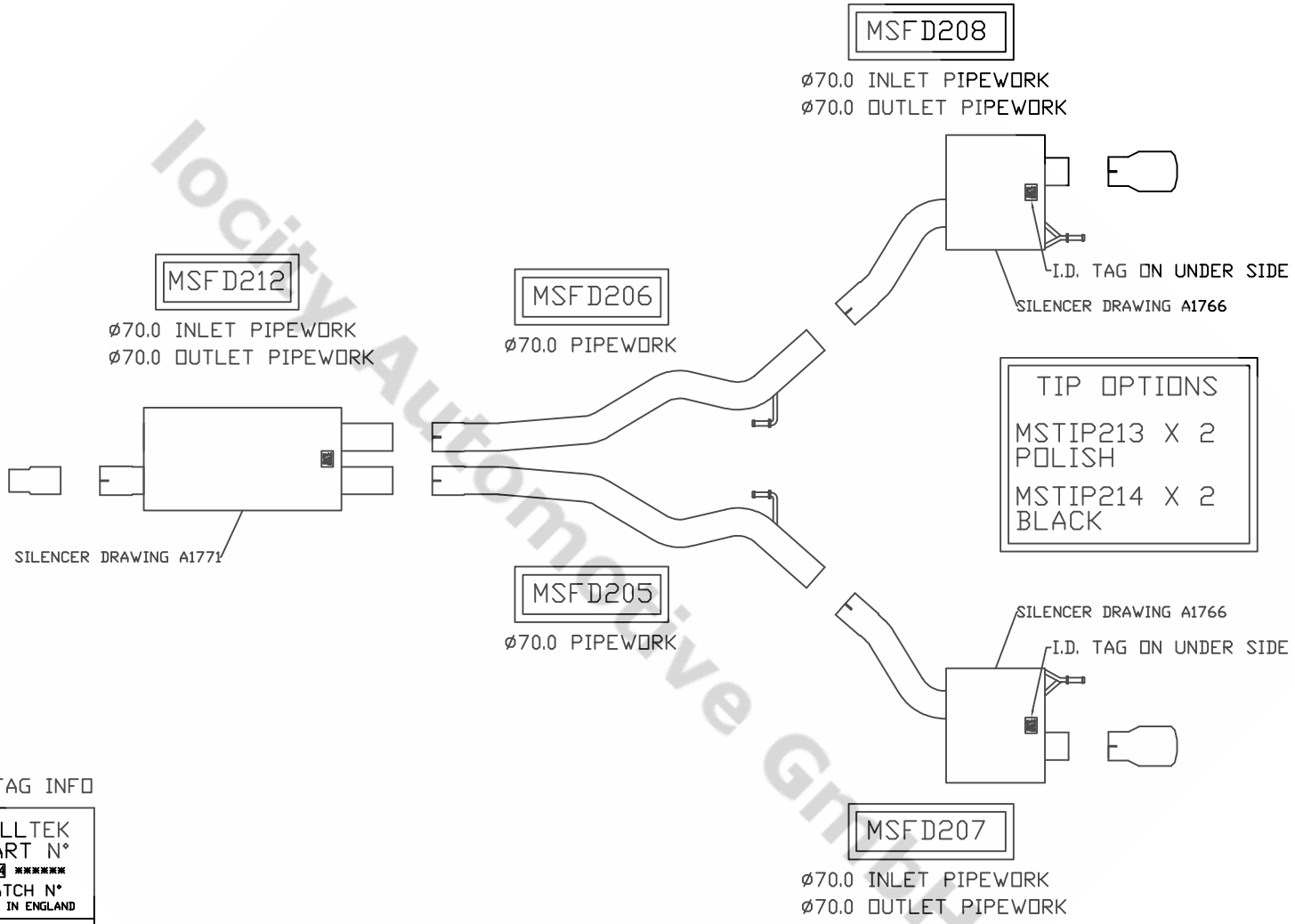

I.D. TAG INFO

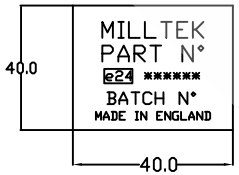

© This drawing is the property of Milltek Sport Ltd
may only be used with permission.

MILLTEK SPORT LTD
BELFIELD INDUSTRIAL ESTATE
ILKESTON, DERBYSHIRE. DE7 8DU
TEL:-0115 8508690 FAX:-0115 9440366

ALL DIMENSIONS IN MM U. O. S.

GENERAL EXHAUST ARRANGEMENT

USED ON:- FORD MUSTANG 2.3 ECOBOOST 2015 -

TOLERANCES	SCALE	DRAWN	DRAWING No.
OPEN:- ±0.4 0.0:- ±0.25 0.00:- ±0.1	1 : 1 THIRD ANGLE	DJM DATE 20/07/16	T0084

e24*70/157*2007/34*2484*00

locity Automotive GmbH

DRAWING No.
A1771

PRODUCTION RELEASE

REV	DATE	REVISION DETAILS	SIGN
A	22/03/16	SILENCER DRAWING PRODUCED ON CAD	DJM

BATCH N°_____

QTY_____

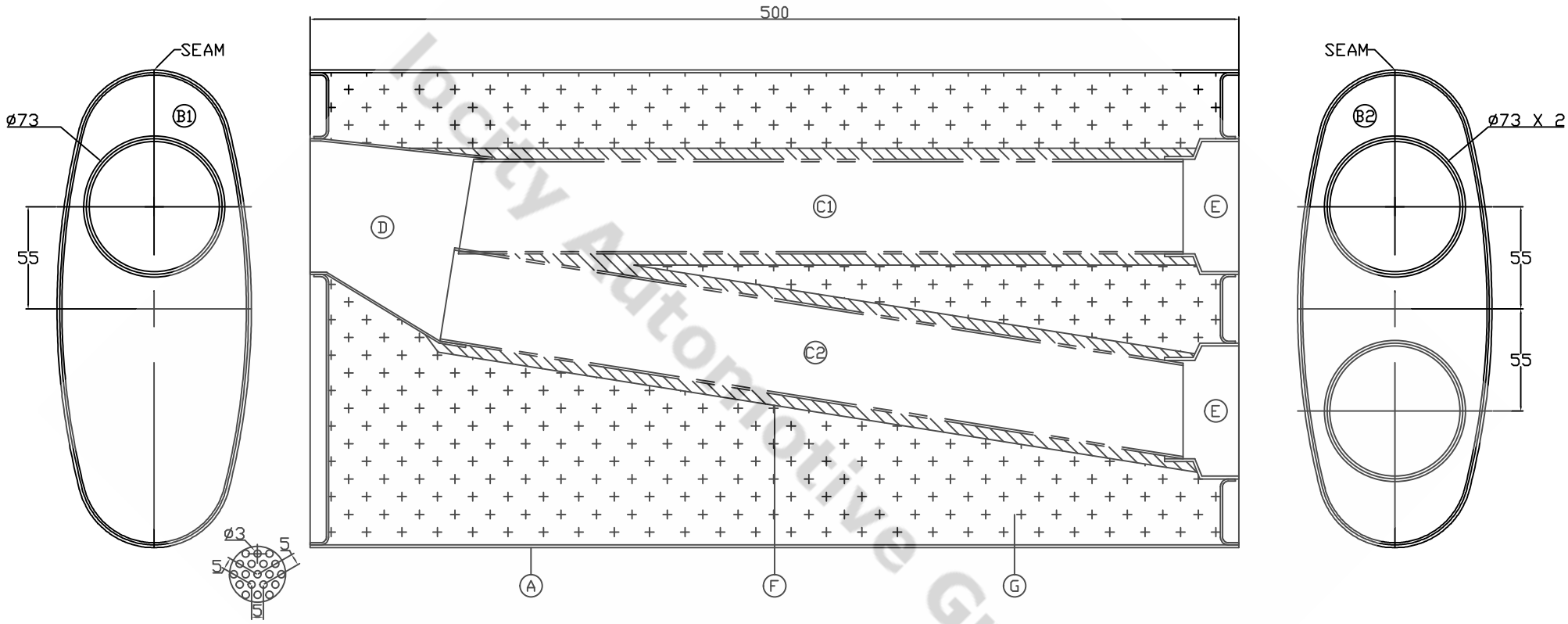

Iocity Automotive GmbH

PERF DETAIL
ø3.0 HOLES ON A 5.0 TRIANGULAR PITCH
6011 PATTERN - 32% OPEN AREA

ITEM	DESCRIPTION	PART No	QTY	MATL	SIZE	FORM
G	FILLING	ACOUSTIC01	1	304	MAX 1400G	FILL CHAMBER WITH MIN 1270G / MAX 1400G
F	SS WIREWOOL	SSWIREWOOL	2	304	AS REQUIRED	WRAP AROUND PERF TUBE & SPOTWELD IN PLACE
E	SLEEVE	250015304	2	304	ø63.5X 40 X 1.5	SIZE ONE END TO 70.0 ID X 20MM, REDUCE OPP END TO 51.0 ID
D	COLLECTOR	F20149	1	304	-	ROLL TO FORM COLLECTOR AND WELD SEAM
C2	PERF TUBE	200012304P	1	304	ø50.8 X 405 X 1.2	MITRE 9° ONE END
C1	PERF TUBE	200012304P	1	304	ø50.8 X 390 X 1.2	MITRE 9° ONE END
B1&B2	BAFFLE	B34010X4	2	304	258 X 105 X 1.5	PUNCH & RAISE AS DRAWING
A	SILENCER BODY	25120934BA	1	304BA	625 X 500 X 0.9	NOTCH, ROLL, SEAM WELD

APPROVED FOR PROD BY.....

© This drawing is the property of Milltek Sport Limited and may only be used with permission.

MILLTEK SPORT LIMITED
BELFIELD INDUSTRIAL ESTATE
ILKESTON, DERBYSHIRE. DE7 8DU
TEL:-0115 8508 690 FAX:-0115 9440366

PART NUMBER:MSFD212

FRONT SILENCER

USED ON:- FORD MUSTANG 2.3 ECOBOOST

ALL DIMENSIONS IN MM U. O. S.

TOLERANCES
OPEN:- ±0.4
0.0:- ±0.25
0.00:- ±0.1

SCALE 1 : 1

THIRD ANGLE

DRAWN DJM

DATE 22/03/16

DRAWING No. A1771

e24*70/157*2007/34*2484*00

DRAWING No.
A1766

REV	DATE	REVISION DETAILS	SIGN
A	20/01/2016	SILENCER DRAWING PRODUCED ON CAD	DJM

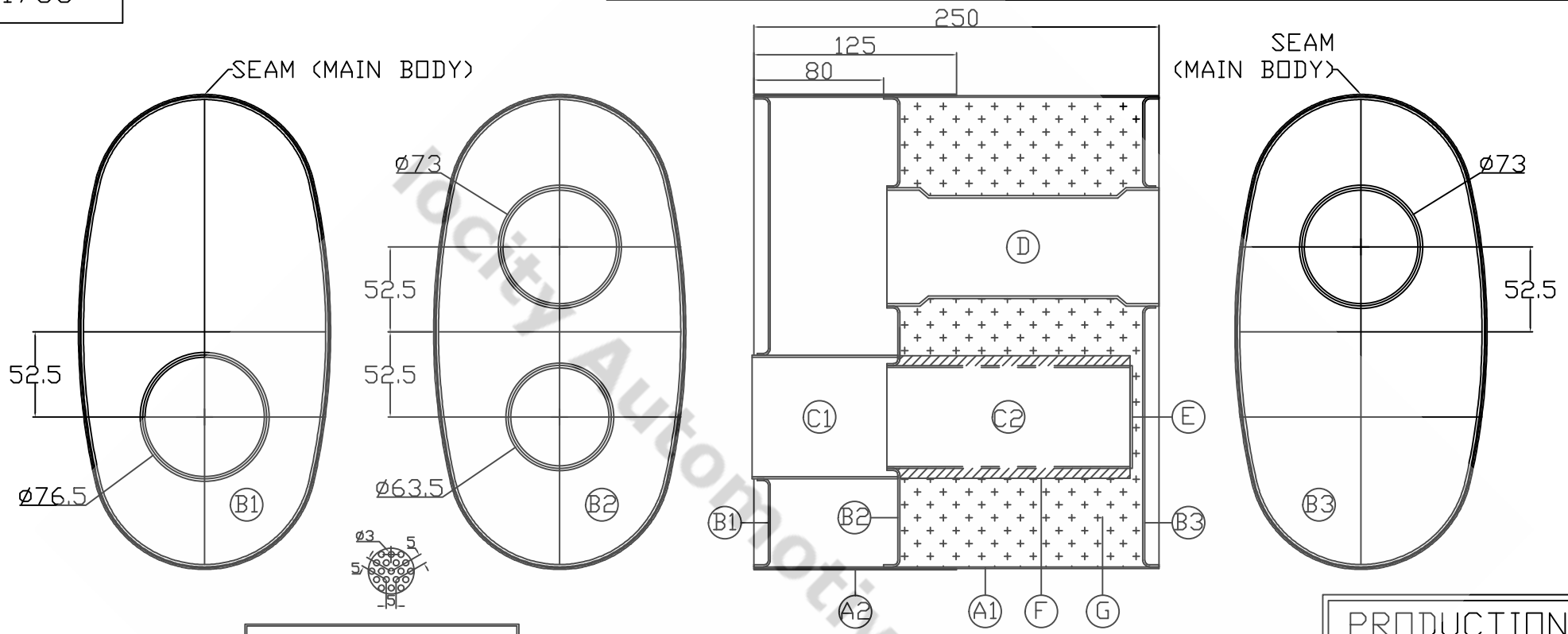

PRODUCTION RELEASE

BATCH N°_____

QTY_____

APPROVED FOR PROD BY.....

© This drawing is the property of Milltek Sport Limited and may only be used with permission.

ITEM	DESCRIPTION	PART No	QTY	MATL	SIZE	FORM
G	FILLING	ACOUSTIC01	1	–	MAX 1400G	FILL CHAMBER WITH MIN 1270G / MAX 1400G
F	WIREWOOL	WWL304	1	304	AS REQD	WRAP AROUND PERF & SPOTWELD IN PLACE
E	BLANKING PLATE	251212342B	1	304	ø63.5 X 1.2	WELD TO END OF PERF C2
D	OUTLET TUBE	250015304	1	304	ø63.5 X 175 X 1.5	SIZE BOTH ENDS TO ø70.0 ID X 20 LONG,
C2	PERF	250012304P	1	304	ø63.5 X 150 X 1.2	-
C1	PERF	300012304P	1	304	ø76.2 X 90 X 1.2	-
B3	ENDPLATE	B34011X6	1	304	290 X 152 X 1.5	PUNCH & RAISE AS DETAIL
B2	ENDPLATE	B34011X6	1	304	290 X 152 X 1.5	PUNCH & RAISE AS DETAIL
B1	ENDPLATE	B34011X6	1	304	290 X 152 X 1.5	PUNCH & RAISE AS DETAIL
A2	SILENCER BODY	25120934BA	1	304	750 X 125 X 0.9	ROLL TO FIT MAIN BODY
A1	SILENCER BODY	25120934BA	1	304	750 X 250 X 0.9	NOTCH, ROLL ,SEAM WELD

MILLTEK SPORT LIMITED
BELFIELD INDUSTRIAL ESTATE
ILKESTON, DERBYSHIRE. DE7 8DU
TEL:-0115 8508690 FAX:-0115 9440366

PART NUMBER:MSFD207 / 208

REAR SILENCER ASSM

USED ON:- FORD MUSTANG 5.0 V8

ALL DIMENSIONS IN MM U. O. S.

TOLERANCES	SCALE	DRAWN	DRAWING No.
OPEN:- ±0.4 0.0:- ±0.25 0.00:- ±0.1	1 : 1 THIRD ANGLE	DJM DATE 20/01/16	A1766

e24*70/157*2007/34*2484*00

Society Automotive Engineers

DRAWING No.
AT1176

PRODUCTION RELEASE

REV	DATE	REVISION DETAILS	SIGN
A	21/12/15	TRIM DRAWING PRODUCED ON CAD	DJM

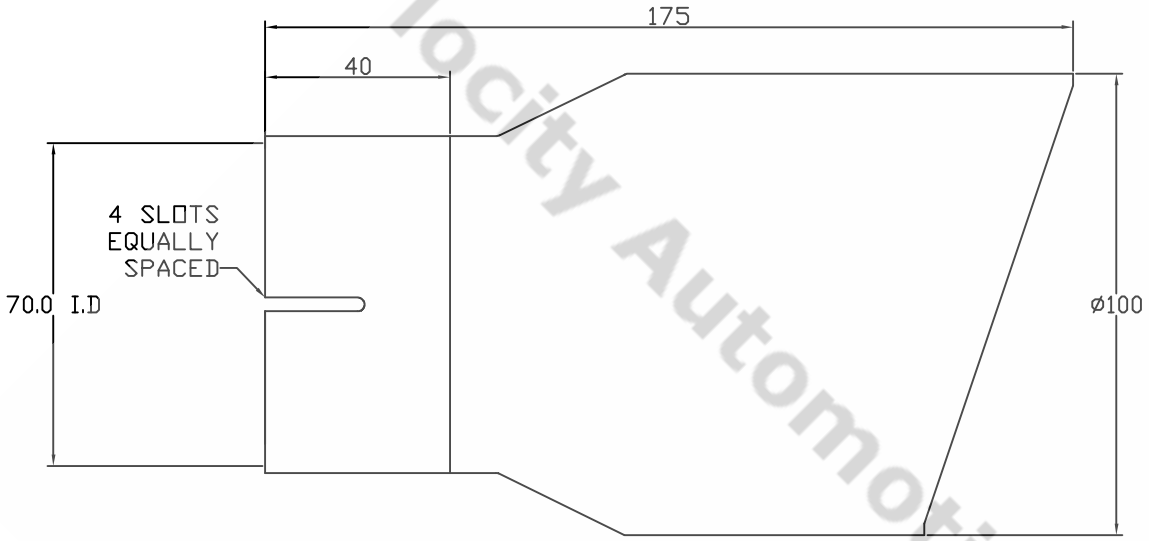

PART No	FINISH
MSTIP213	POLISHED
MSTIP214	BLACK

MODIFY FROM AT1094
CUT 40MM FROM INLET END OF TIP
& SIZE 70.0MM ID

locity Automotive GmbH |

APPROVED FOR PROD BY.....

© This drawing is the property of MILLTEK SPORT LTD and may only be used with permission.

MILLTEK SPORT LTD
BELFIELD INDUSTRIAL ESTATE
ILKESTON, DERBYSHIRE. DE7 8DU
TEL:-0115 8508690 FAX:-0115 9440366

ITEM	DESCRIPTION	PART No	QTY	MATL	SIZE	FORM

ALL DIMENSIONS IN MM U. O. S.

GT-100 TIP ASSY

USED ON:- SEE CHART

TOLERANCES
OPEN:- ±0.4
0.0:- ±0.25
0.00:- ±0.10

SCALE 1 : 1
THIRD ANGLE
DRAWN DJM
DATE 21/12/15

DRAWING No. AT1176

e24*70157*2007/34*2484*00

EINBAUANLEITUNG

Die Schalldämpferanlage wird unter dem Fahrzeug an den vorhandenen Befestigungsstellen am Fahrzeugboden befestigt.

Beim Zusammenfügen der Schalldämpferanlage ist zu beachten, daß sie nicht verkantet oder verspannt ist.

Danach werden die Verbindungselemente an den Anschlüssen der kompletten Anlage so stark angezogen, daß sich die Anlage nicht verdrehen kann und die Anschlüsse dicht sind.

MOUNTING INSTRUCTION

The screws and nuts of the pipe connections often are very strong. So you have to spray some fluid on them which removes the rust.

Don´t fix the exhaust system parts at first. You have to align them at first and than you can tighten them.

Test the connections if they are gastight.

locity Automotive GmbH